概述

HXY464 是一款低功耗高灵敏全极性霍尔开关芯片，采用 CMOS 工艺设计生产。该芯片器件内部集成了电压调节器、霍尔电压发生器、小信号放大器、斩波稳压器、施密特触发器和 CMOS 输出驱动器。该芯片温度稳定性好、抗应力强、灵敏度高等特点，工作电压在 2.5V-5.5V。提供 TO-92S 直插封装，贴片 SOT-23-3L 封装，且封装都符合RoHS环保标准.

特征

- 推挽输出
- ESD 性能可达：±6 kV
- 工作电压：2.5V-5.5V
- 微功耗电池供电应用
- 全极性的输出开关

典型应用

- 固态开关
- 无绳手机提醒开关
- 翻盖式手机屏保开关
- 笔记本电脑
- 低占空比替代簧片的磁传感开关
- 液位计
- 接近开关

功能框图

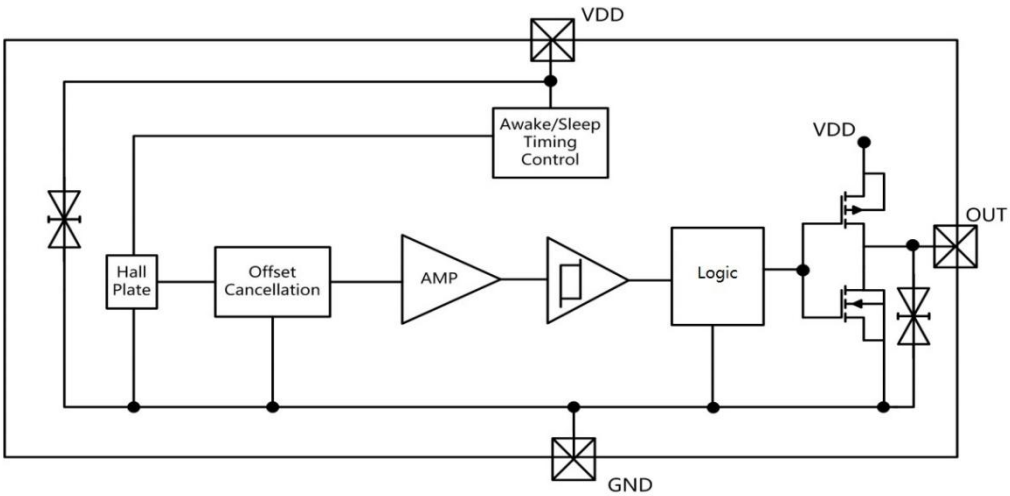

HXY464 功能框图

引脚信息

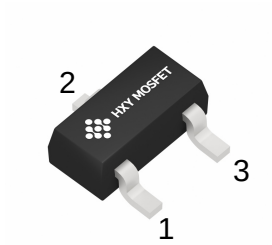

SOT-23/23-3L

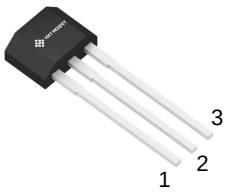

TO-92S

芯片引脚号	名称	说明
1	VDD	电源
2	GND	地
3	VOUT	输出

订购信息

编号	封装	包装	工作温度范围
HXY464UA	TO-92S	1000/袋	-40℃~85℃
HXY464SU	SOT-23-3L	3000/盘	-40℃~85℃

绝对最大额定

绝对最大额定值是芯片所能承受的极限值，超过该值芯片可能会永久损坏。

参数	符号	数值	单元
电源电压	VDD	6.0	V
反向电压	VDD	-0.3	V
输出电流	IOUT	5	mA
输出电压	VOUT	6.0	V
工作温度范围	Ta	-40~85	℃
储存温度范围	Ts	-50~150	℃

电磁特性

测试条件：T_J=25˚C，VDD=3.0V

参数	符号	测试条件	最小	典型	最大	单位
电特性						
工作电压	VDD		2.5		5.5	V
输出低电压	VOL	IOUT=1mA			0.2	V
输出高电压	VOH	IOUT=-1mA	VDD-0.2			V
输出电流	IOUT	输出低电压时			3.0	mA
		输出高电压时	-2.0			mA
工作电流	Iawk	唤醒时		2.8		mA
电源平均电流	IDD			50	100	uA
唤醒模式时间	Tawk			50	80	us
休眠模式时间	Tp			3.1	4.6	ms
工作频率	Fw		220	320		Hz
响应频率	Fr		110	160		Hz
磁特性						
工作点	Bop		+/-18	+/-30	+/-42	Gauss
释放点	Brp		+/-8	+/-20	+/-32	Gauss
回差	Bhys	|Bop-Brp|		10		Gauss

磁电转换说明

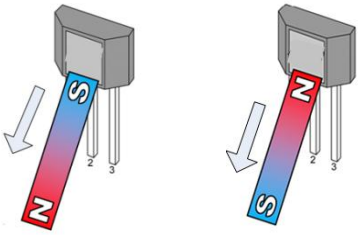

VOUT= 高电平

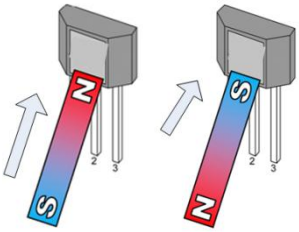

VOUT= 低电平

TO-92S

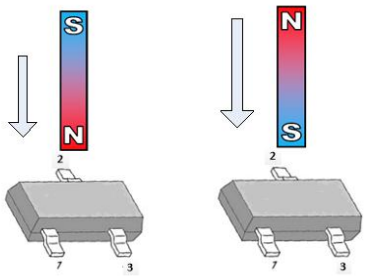

VOUT= 低电平

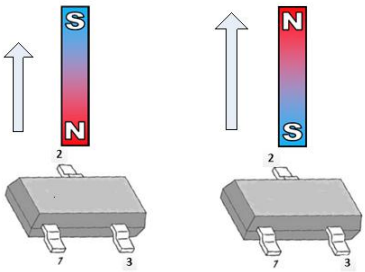

VOUT= 高电平

SOT-23-3L

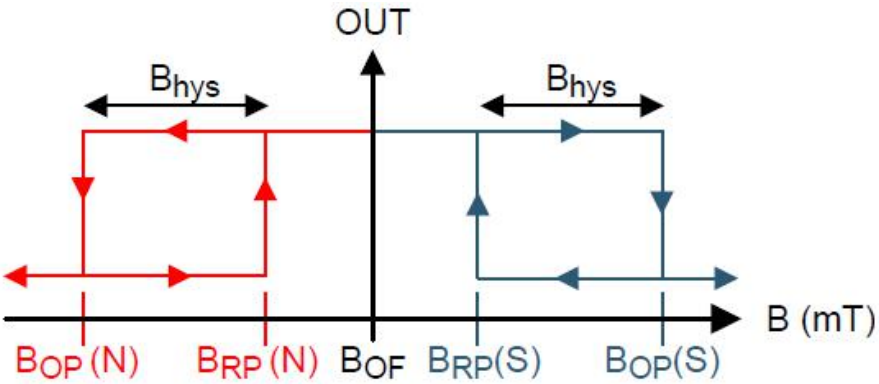

应用电路

C1=2.2uF

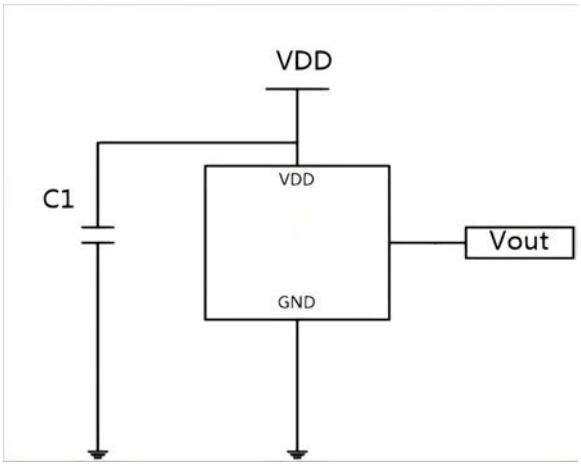

注意事项

- 霍尔芯片是敏感器件，在使用及存储过程中应注意采取静电防护措施。
- 在安装使用中应尽量减少施加到器件外壳和引线上的机械应力。
- 建议焊接温度不超过 350℃，持续时间不超过 5 秒。
- 为保证霍尔芯片的安全性和稳定性，不建议长期超出参数范围使用。

外形尺寸

TO-92S 封装尺寸

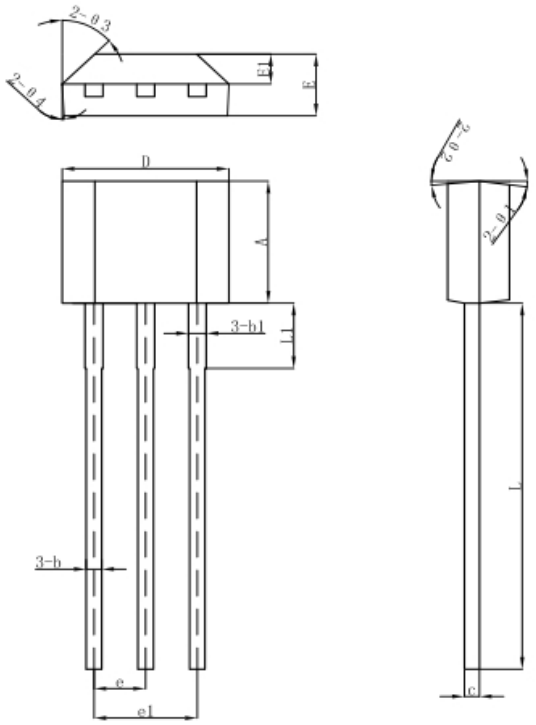

符号	机械尺寸/mm		
	最小	典型	最大
A	2.90	3.00	3.10
b	0.35	0.39	0.40
b1		0.44	
c	0.36	0.38	0.40
D	4.00	4.10	4.20
E	1.42	1.52	1.62
E1		0.75	
e		1.27	
e1		1.27	
L1		2.54	
L	13.50	14.50	15.50
θ1		6°	
θ2		3°	
θ3		45°	
θ4		3°	
h		3.6	

SOT-23-3L 封装尺寸

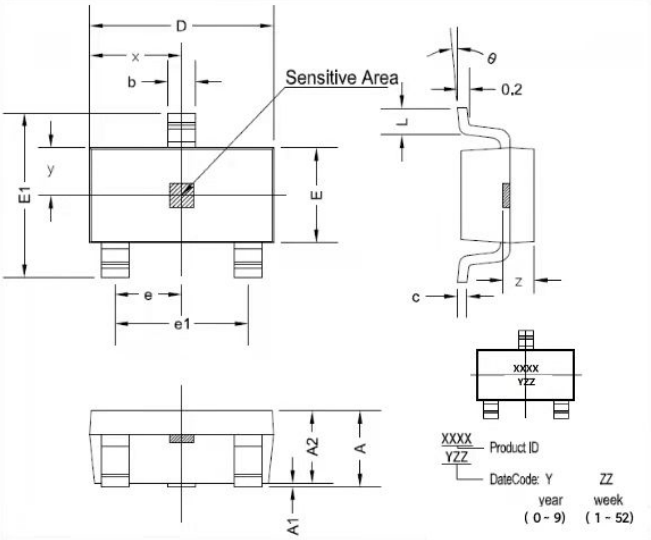

符号	尺寸 （毫米）		尺寸 （英尺）	
	最小	最大	最小	最大
A	1.05	1.25	0.041	0.049
A1	0	0.1	0	0.004
A2	1.05	1.15	0.041	0.045
b	0.3	0.5	0.012	0.02
c	0. 100	0.2	0.004	0.008
D	2.82	3.02	0.111	0.119
E	1.5	1.7	0.059	0.067
E1	2.65	2.95	0.104	0.116
e	0.950 TYP		0.037 TYP	
e1	1.8	2	0.071	0.079
L	0.3	0.6	0.012	0.024
x	1.460 TYP		0.057 TYP	
y	0.800 TYP		0.032 TYP	
z	0.600 TYP		0.024 TYP	
θ	0°	8°	0°	8°

Attention

■ Any and all HUA XUAN YANG ELECTRONICS products described or contained herein do not have specifications that can handle applications that require extremely high levels of reliability, such as life-support systems, aircraft's control systems, or other applications whose failure can be reasonably expected to result in serious physical and/or material damage. Consult with your HUA XUAN YANG ELECTRONICS representative nearest you before using any HUA XUAN YANG ELECTRONICS products described or contained herein in such applications.

■ HUA XUAN YANG ELECTRONICS assumes no responsibility for equipment failures that result from using products at values that exceed, even momentarily, rated values (such as maximum ratings, operating condition ranges, or other parameters) listed in products specifications of any and all HUA XUAN YANG ELECTRONICS products described or contained herein.

■ Specifications of any and all HUA XUAN YANG ELECTRONICS products described or contained herein stipulate the performance, characteristics, and functions of the described products in the independent state, and are not guarantees of the performance, characteristics, and functions of the described products as mounted in the customer's products or equipment. To verify symptoms and states that cannot be evaluated in an independent device, the customer should always evaluate and test devices mounted in the customer's products or equipment.

■ HUA XUAN YANG ELECTRONICS CO.,LTD. strives to supply high-quality high-reliability products. However, any and all semiconductor products fail with some probability. It is possible that these probabilistic failures could
give rise to accidents or events that could endanger human lives, that could give rise to smoke or fire, or that could cause damage to other property. When designing equipment, adopt safety measures so that these kinds of accidents or events cannot occur. Such measures include but are not limited to protective circuits and error prevention circuits for safe design, redundant design, and structural design.

■ In the event that any or all HUA XUAN YANG ELECTRONICS products(including technical data, services) described or contained herein are controlled under any of applicable local export control laws and regulations, such products must not be exported without obtaining the export license from the authorities concerned in accordance with the above law.

■ No part of this publication may be reproduced or transmitted in any form or by any means, electronic or mechanical, including photocopying and recording, or any information storage or retrieval system, or otherwise, without the prior written permission of HUA XUAN YANG ELECTRONICS CO.,LTD.

■ Information (including circuit diagrams and circuit parameters) herein is for example only ; it is not guaranteed for volume production. HUA XUAN YANG ELECTRONICS believes information herein is accurate and reliable, but no guarantees are made or implied regarding its use or any infringements of intellectual property rights or other rights of third parties.

■ Any and all information described or contained herein are subject to change without notice due to product/technology improvement, etc. When designing equipment, refer to the "Delivery Specification" for the HUA XUAN YANG ELECTRONICS product that you intend to use.