General Description

The SSP7603PxxPR series is a group of positive voltage output,three-pin regulators,it provide a high current even when the input/output voltage differential is small.low power consumption and high accuragy is achieved through CMOS and laser trimming technologies.

The SSP7603PxxPR consists of a high-precision voltage reference,an error amplification circuit,and a current limited output driver.Load Transient response has improved in comparidon to the existing series. SOT-89 package.

Features

- Low voltage drop:0.26v@100mA &VOUT=3.3V
- High input voltage:15V
- Low temperature coefficient
- Large Output Current:500mA
- Low Quiescent Current:2.0uA
- Output Voltage Accuracy: tolerance ±2%
- Built-in current limiter
- SOT-89 package

Application

- Battery-powered Equipments
- Hand-Hold Equipment
- GPS Receivers
- Wireless LAN

Pin Configuration And Descriptions

SOT-89

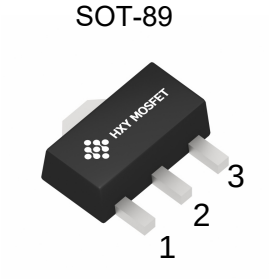

PIN NO.	PIN NAME	FUNCTION
1	GND	GND pin
2	VIN	Input voltage pin
3	VOUT	Output voltage pin

Order Information

Orderable Device	Package	Output Voltage	Packing Option
SSP7603PxxPR	SOT-89	2.8V,3.0V,3.3V,3.6V, 4.0V,4.5V,5.0V	1000/Reel

xx:From 28-50

Absolute Maximum Ratings

Description	Symbol	Value Range	Unit
Supplu Voltage	V_{IN}	3.5～18	V
Storage Temperature Range	T_{STG}	-40～+150	°C
Operating Free-air Temperature Range	T_A	-40～+125	°C

Note:Stresses greater than those listed under "Absolute Maximum Ratingsmay" cause permanent damage to the device. These are stress ratings only, and functional operation of the device at these or any other conditions beyond those indicated under "Recommended Operating Conditionsis" not implied. Exposure to "Absolute Maximum Ratings" for extended periods may affect device reliability.

Block Diagram

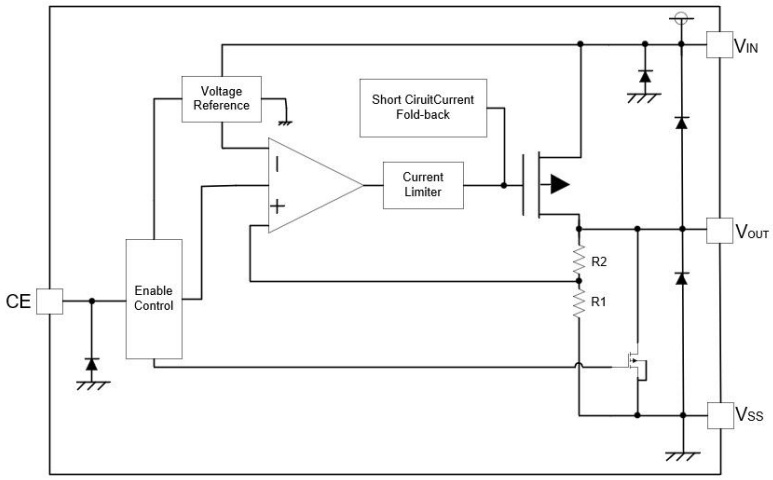

DC Characteristics (unless otherwise noted T_A= 25°C)

Parameter	Symbol	Conditions	Min.	Typ.	Max.	Unit
Output Voltage	Vout	Vin=Vout+1V 1.0mA≤Iout≤30mA	Vout×0.98	--	Vout×1.02	V
Output Current*1	Iout	Vin-Vout=1.5V	--	500	--	mA
Low dropout*2	V_{drop}	Refer to the next table				
Line Regulation	$\frac{\Delta V_{OUT}}{\Delta V_{IN} \times V_{OUT}}$	4.3V≤Vin≤8V Iout=100mA	--	0.75	0.9	%/V
Load Regulation	△Vout	Vin= Vout+1V 1.0mA≤Iout≤100mA	--	12	30	mV
Output voltage Temperature Coefficiency	$\frac{\Delta V_{OUT}}{\Delta Ta}$	Iout=30mA 0℃≤Ta≤70℃	--	±100	--	Ppm/℃
PSRR	PSRR	F=1KHz Vin=Vout+1V	--	40	--	dB
Supply Current	Iss1	--	--	1	2	uA
Input Voltage	Vin	--	3.5	--	15	V

Electrical Characteristics by Output Voltage：

Output Voltage Vout(V)	Dropout Voltage Vdif（V）		
	Conditions	Typ.	Max.
2.0 < Vout ≤ 2.8	Iout=80 mA	0.4	0.6
2.8 < Vout ≤ 4.0	Iout=100 mA	0.26	0.46
4.0 < Vout ≤ 5.0		0.23	0.42
2.8 < Vout ≤ 4.0	Iout=200 mA	0.53	0.82
4.0 < Vout ≤ 5.0		0.42	0.76
3.0 < Vout ≤ 4.0	Iout=500 mA	1.5	1.8
4.0 < Vout ≤ 5.0		1.2	1.5

Application Circuit

Basic Circuits

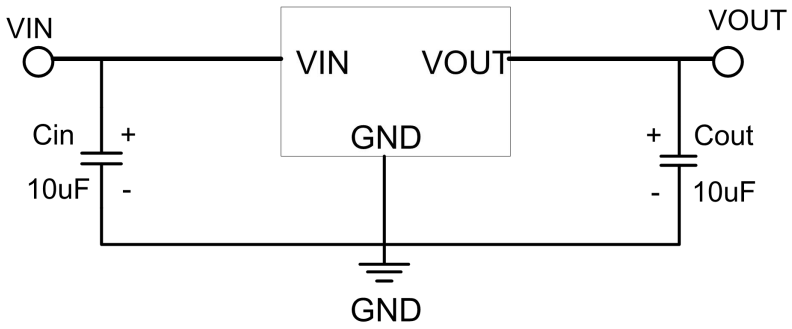

Note1: Cin=Cout=10uF. (10uF Electrolytic capacitor is recommended).

Note2: If the input and output capacitors are ceramic, add a resistor at the input, as follows.

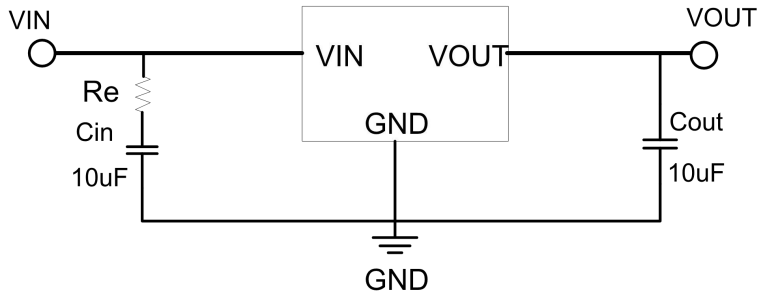

Note: Re= (1.2~1.8)Ω.

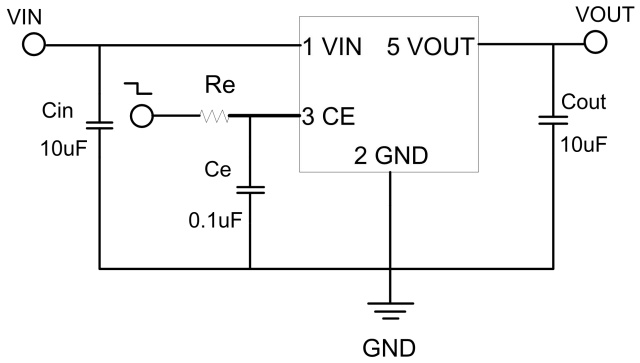

Note1:Input capacitor C_{IN}=10uF.

Note2:Ouput capacitor C_{OUT}=10uF/6.8uF(1uF Tantalum capacitor or 6.8uF ceramic capacitor is recommended).

Note3:The CE port is recommended to connect the current limiting resistor Re. The recommended resistance is 10K~47K. When the input voltage is larger than or equal to 12V, it is recommended to add a 0.01uF capacitor Ce.

Typical Characteristics

(1) Output Voltage vs Input voltage

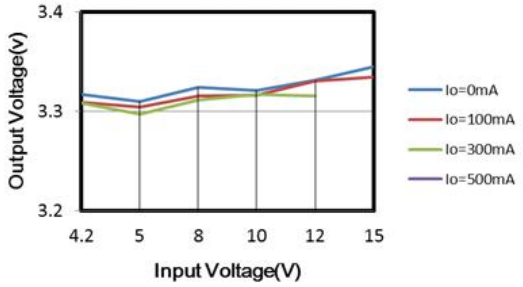

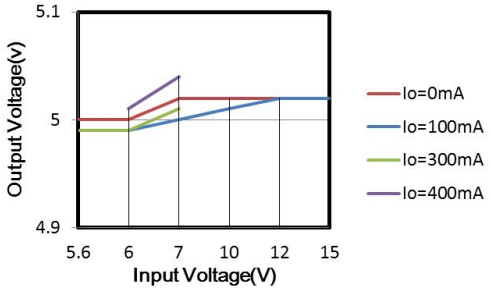

(2) Output Voltage vs.Output Current

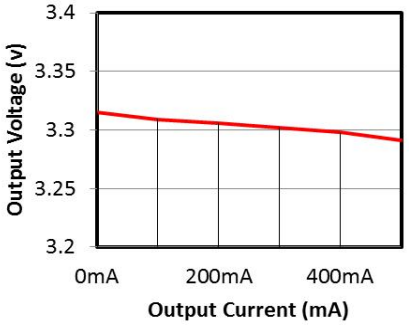

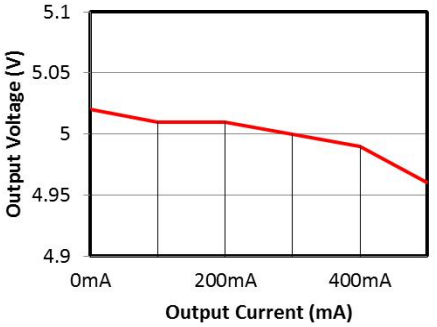

（3） Input Transient Response

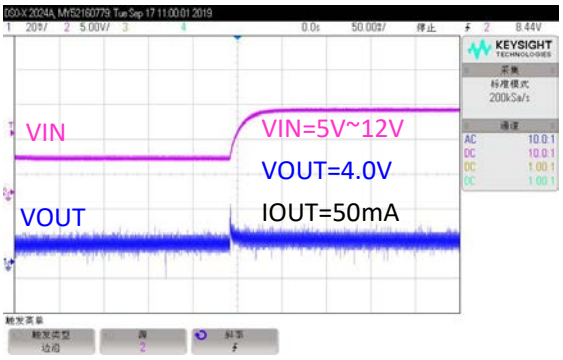

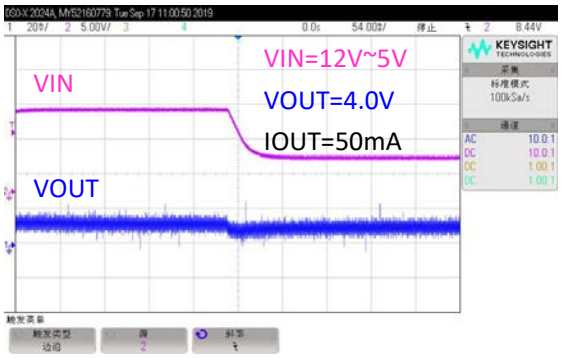

（4） Load Transient Response

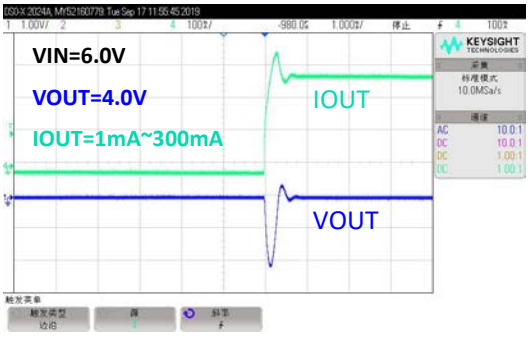

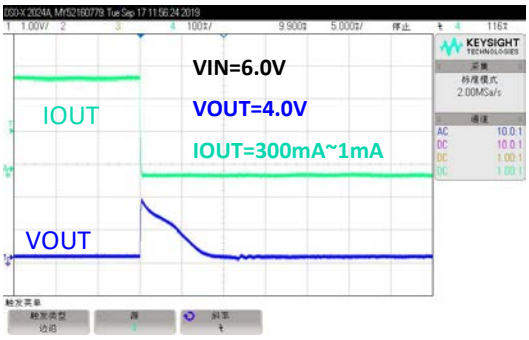

Package Outline Dimensions

SOT-89

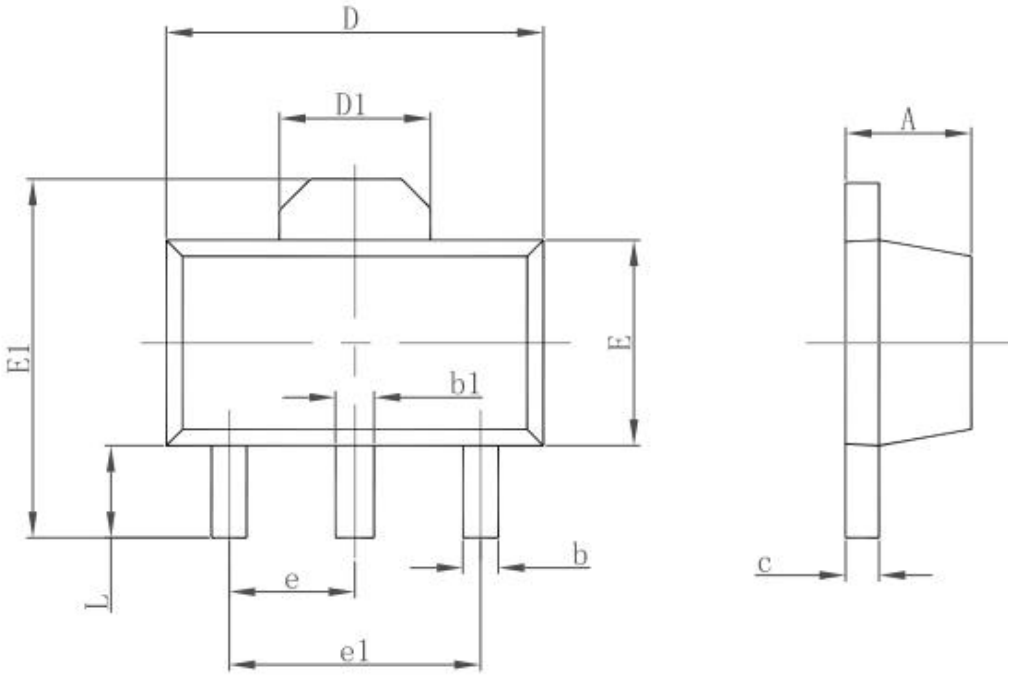

Symbol	Dimensions In Millimeters		Dimensions In Inches	
	Min.	Max.	Min.	Max.
A	1.400	1.600	0.055	0.063
b	0.320	0.520	0.013	0.020
b1	0.400	0.580	0.016	0.023
c	0.350	0.440	0.014	0.017
D	4.400	4.600	0.173	0.181
D1	1.550 REF.		0.061 REF.	
E	2.300	2.600	0.091	0.102
E1	3.940	4.250	0.155	0.167
e	1.500 TYP.		0.060 TYP.	
e1	3.000 TYP.		0.118 TYP.	
L	0.900	1.200	0.035	0.047

Attention

■ Any and all HUA XUAN YANG ELECTRONICS products described or contained herein do not have specifications that can handle applications that require extremely high levels of reliability, such as life-support systems, aircraft's control systems, or other applications whose failure can be reasonably expected to result in serious physical and/or material damage. Consult with your HUA XUAN YANG ELECTRONICS representative nearest you before using any HUA XUAN YANG ELECTRONICS products described or contained herein in such applications.

■ HUA XUAN YANG ELECTRONICS assumes no responsibility for equipment failures that result from using products at values that exceed, even momentarily, rated values (such as maximum ratings, operating condition ranges, or other parameters) listed in products specifications of any and all HUA XUAN YANG ELECTRONICS products described or contained herein.

■ Specifications of any and all HUA XUAN YANG ELECTRONICS products described or contained herein stipulate the performance, characteristics, and functions of the described products in the independent state, and are not guarantees of the performance, characteristics, and functions of the described products as mounted in the customer's products or equipment. To verify symptoms and states that cannot be evaluated in an independent device, the customer should always evaluate and test devices mounted in the customer's products or equipment.

■ HUA XUAN YANG ELECTRONICS CO.,LTD. strives to supply high-quality high-reliability products. However, any and all semiconductor products fail with some probability. It is possible that these probabilistic failures could
give rise to accidents or events that could endanger human lives, that could give rise to smoke or fire, or that could cause damage to other property. When designing equipment, adopt safety measures so that these kinds of accidents or events cannot occur. Such measures include but are not limited to protective circuits and error prevention circuits for safe design, redundant design, and structural design.

■ In the event that any or all HUA XUAN YANG ELECTRONICS products(including technical data, services) described or contained herein are controlled under any of applicable local export control laws and regulations, such products must not be exported without obtaining the export license from the authorities concerned in accordance with the above law.

■ No part of this publication may be reproduced or transmitted in any form or by any means, electronic or mechanical, including photocopying and recording, or any information storage or retrieval system, or otherwise, without the prior written permission of HUA XUAN YANG ELECTRONICS CO.,LTD.

■ Information (including circuit diagrams and circuit parameters) herein is for example only ; it is not guaranteed for volume production. HUA XUAN YANG ELECTRONICS believes information herein is accurate and reliable, but no guarantees are made or implied regarding its use or any infringements of intellectual property rights or other rights of third parties.

■ Any and all information described or contained herein are subject to change without notice due to product/technology improvement, etc. When designing equipment, refer to the "Delivery Specification" for the HUA XUAN YANG ELECTRONICS product that you intend to use.